Amphenol Air LB

Your Satisfaction. Everyday. Everywhere.

Find all our other products on www.amphenol-airlb.fr

IN PROGRESS

New generation of SIM connector

REACH COMPLIANCE

RoHS Compliant

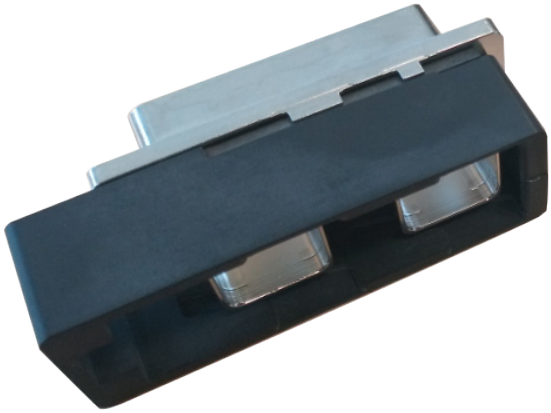



SIM QUICK RELEASE CONNECTOR

Brochure 05/26 - V2.0

2 rue Clément ADER, Zac de Wé - 08110 CARIGNAN - FRANCE
Customers Service - Tel : +33 (0)3 24 22 32 66 - customer-service@amphenol-airlb.fr

PRESENTATION

The SIM QUICK RELEASE connector is a connector with a compact design based on the EN4165 / SIM standard.

SPACE SAVING

It is equipped with modules selected from a wide range of overmolded EN4165 / SIM modules offering several contact sizes and arrangements.
It offers second to none dielectric and sealing performances in its category.
For Power & Signal contacts.

MODULARITY

The mating / unmating of the plug and the socket is done by a quick locking / unlocking system (receptacle side).

TIME SAVING

It is available in 2, 3 and 4 modules version, in metallized version or not.
The 2 and 4 modules versions are compatible with the rear accessories of the SIM / EN4165 standard range.
A unique model of polarizer exists in 7 different colors and bcan e put in 2 cavities of plug / receptacle in 6 possible positions.

APPLICATIONS IN HARSH ENVIRONMENT

Commercial Aerospace, Defence

REACH AND RoHS SPECIFICATION

All connector shells and modules are conformed to the REACH spec.

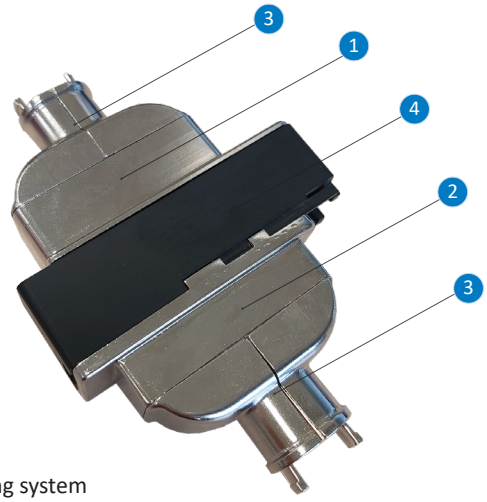

CAPTION

1 - Plug
2 - Receptacle
3 - Shielding cover
4 - Locking / unlocking system

MAIN TECHNICAL FEATURES

MATERIAL

Shells : Thermoplastic
Plating : Nickel or without plating
Modules : Thermoplastic and Silicone elastomer
Contacts : Copper alloy, Gold on Nickel plating

ENVIRONMENTAL

Operating temperature : -55° to +175°C continuously
Salt Spray withstanding (BS) :

Plating (Plug + Receptacle mated)	
Without plating	Nickel
/	500h

ELECTRICAL

Insulation resistance : ≥ to 5000 MΩ

Contact size	23	22	20	16	12	8
Withstanding voltage	1800 V eff. 50 Hz					
Max. current rating (A)	5		7,5	13	23	46	80

MODULE RETENTION IN SHELL

25,4 daN

MECHANICAL

Shocks : 100g during 6 ms
Vibrations : 0,4 g² / Hz up to 2000 Hz, 8 H per axis
Endurance : 500 full mating and unmating cycles

SEALING

Interfacial : according to EN2591 test 314 pressure = 11 hPa
Air leakage : leak ≤ 4 cm³/h under differential pressure of 1 bar
Immersion at low air pressure : according to EN2591 test 314 pressure = 11 hPa

METALLIZATION RESISTANCE

Metallization continuity by conductive plating
Nickel plating : < 3 mΩ under 1 Amp per connection

AMPHENOL AIR LB - 2 rue Clément ADER, Zac de Wé - 08110 CARIGNAN - FRANCE - Tel : +33(0)3.24.22.78.49 - www.amphenol-airlb.fr

PART NUMBERING AND DIMENSIONS

PLUG

The plug is available in 2, 3 and 4 modules versions.
For the 4 modules connector, a securing locking option is available. A protection zone is then integrated into the plug and a tool becomes necessary for unlocking. Please consult us.

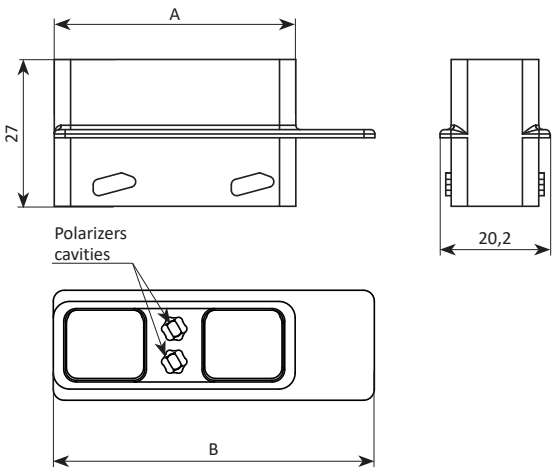



Dimensions (mm)	A	B
Plug 2 modules	44,42	59
Plug 3 modules	56,58	71,5
Plug 4 modules	74,7	89,5
Plug 4 modules with securing locking option	74,7	91,5

FLANGED RECEPTACLE

The receptacle is available in 2, 3 and 4 modules versions.
Panel mounting.

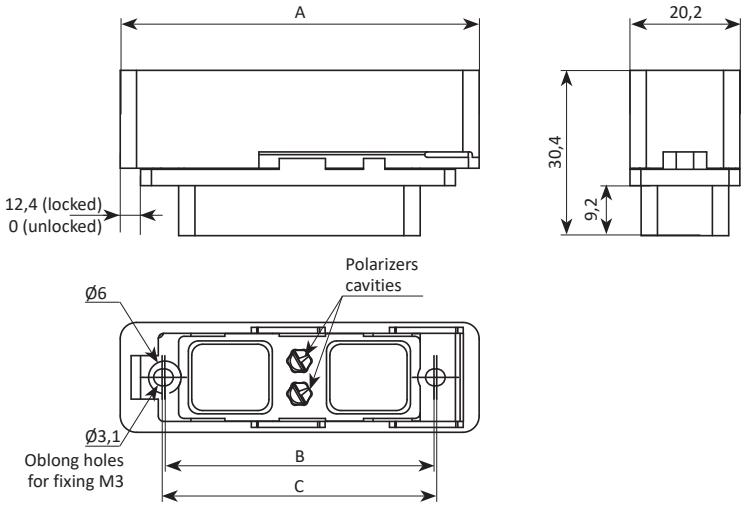

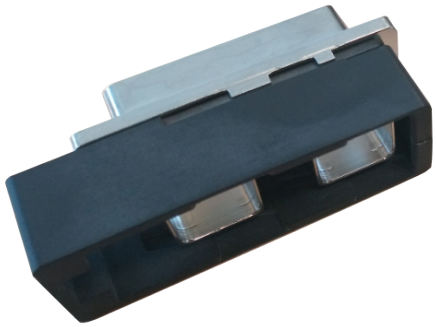

Dimensions (mm)	A	B	C
Receptacle 2 modules	66	49,5	50,5
Receptacle 3 modules	76,23	67,5	68,5
Receptacle 4 modules	95,48	80	81

POLARIZERS

There is a unique model of polarizer existing in 7 different colors.
Each plug / socket can contain 2 polarizers. Each polarizer can be put in 6 different positions which offers a total of 36 mechanical keying combinations.
The 7 different colors of polarizers allow visual polarization only when coupling the connector.



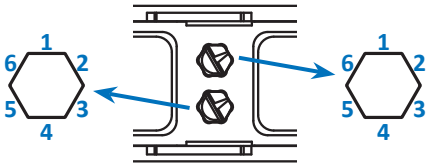

ACCESSORIES

The Quick Release 2 and 4 modules versions are compatible with all the rear accessories of the SIM / EN4165 range.
Please consult our catalog «SIM connectors».





Example of compatible rear accessories

Quick Install shielding cover
This cover exists in 2, 3 and 4 modules versions.
It can be mounted without tool.

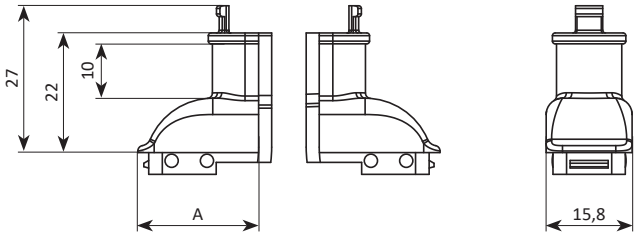

Dimension	A
Cover 2 modules	22,21
Cover 3 modules	28,29
Cover 4 modules	37,35



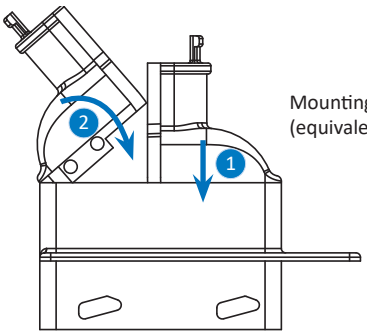

Mounting of a cover on the plug (equivalent mounting on the receptacle)

IMPLEMENTATION

LOCKING / UNLOCKING OF THE CONNECTOR

The locking is made on receptacle side.

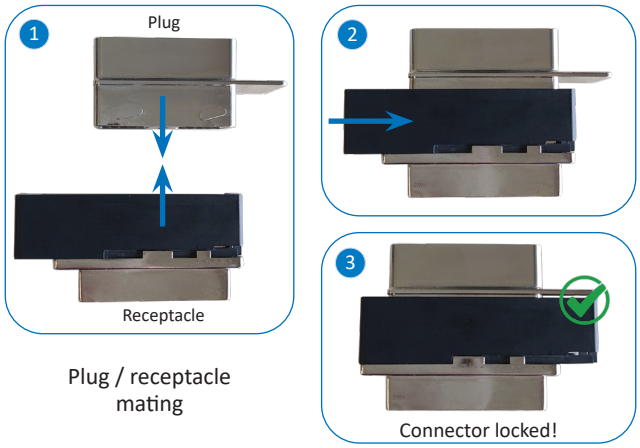

Plug / receptacle mating

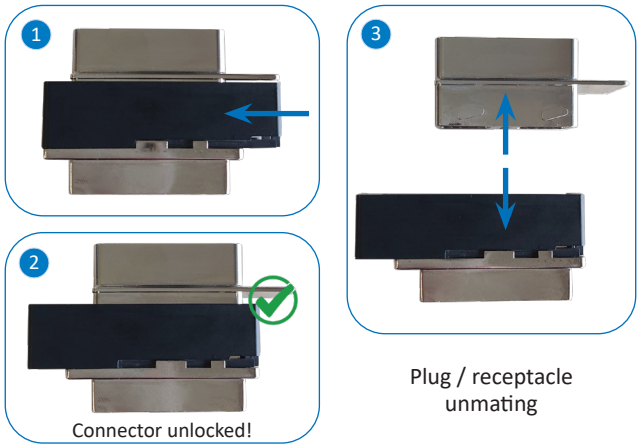

Plug / receptacle unmating

AMPHENOL AIR LB - 2 rue Clément ADER, Zac de Wé - 08110 CARIGNAN - FRANCE - Tel : +33(0)3.24.22.78.49 - www.amphenol-airlb.fr